ISSUE DATE:

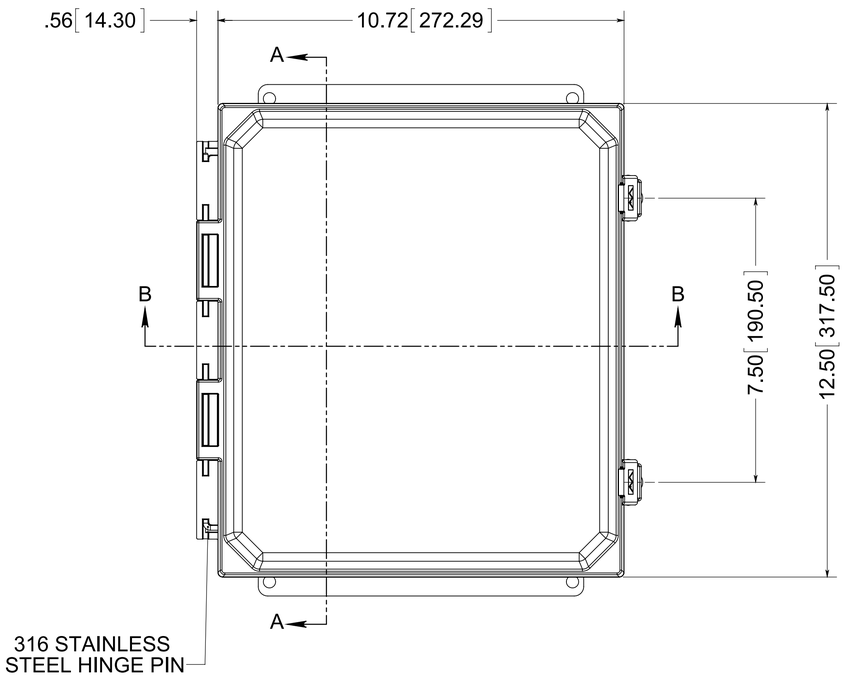

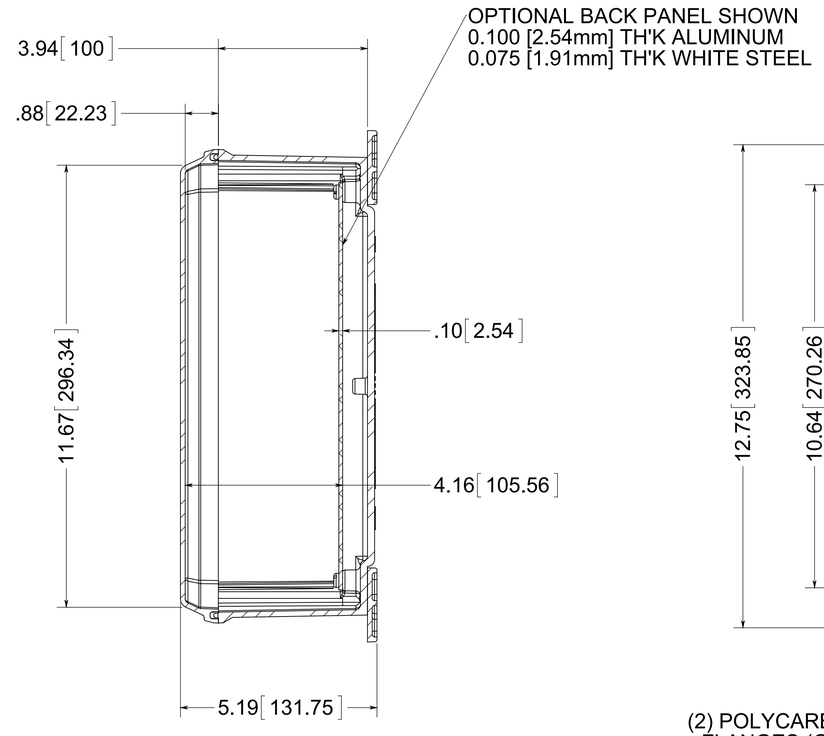

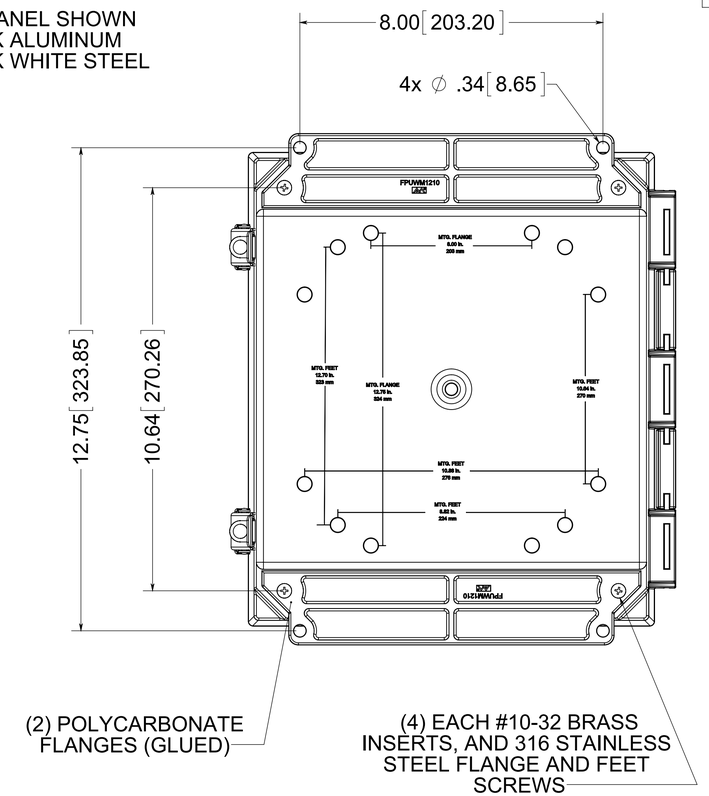

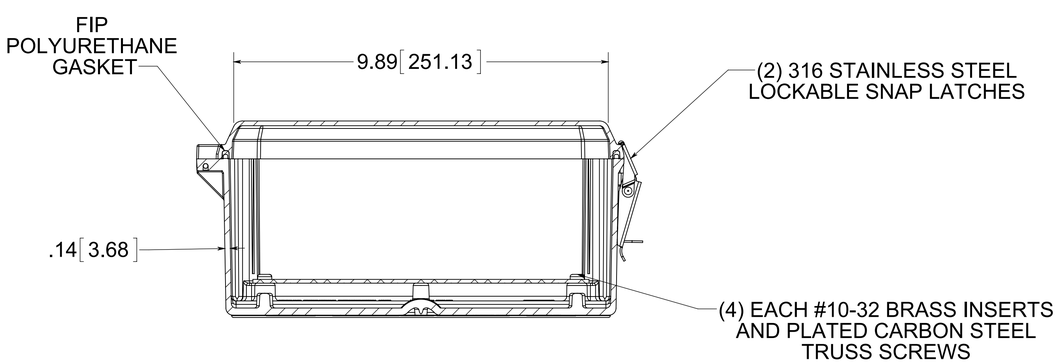

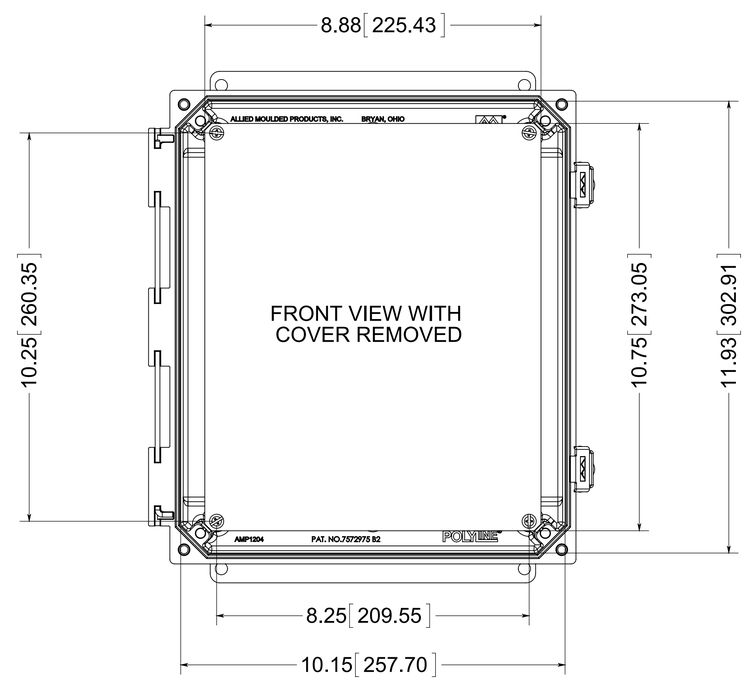

MATERIAL:
BOX - INJECTED POLYCARBONATE
STANDARD COVER - INJECTED POLYCARBONATE
CLEAR COVER - INJECTED POLYCARBONATE

CONFIDENTIAL
THIS MATERIAL IS OWNED BY THE ALLIED MOULDED PRODUCTS COMPANY, IS DISCLOSED IN CONFIDENCE, AND IS NOT TO BE REPRODUCED OR DISTRIBUTED WITHOUT PRIOR WRITTEN PERMISSION FROM ALLIED MOULDED PRODUCTS.

ALLIED MOULDED PRODUCTS
BRYAN, OHIO
The Original Fiber Glass Outlet Box

Description
AMP Polyline

Part No.
AMP1204LF